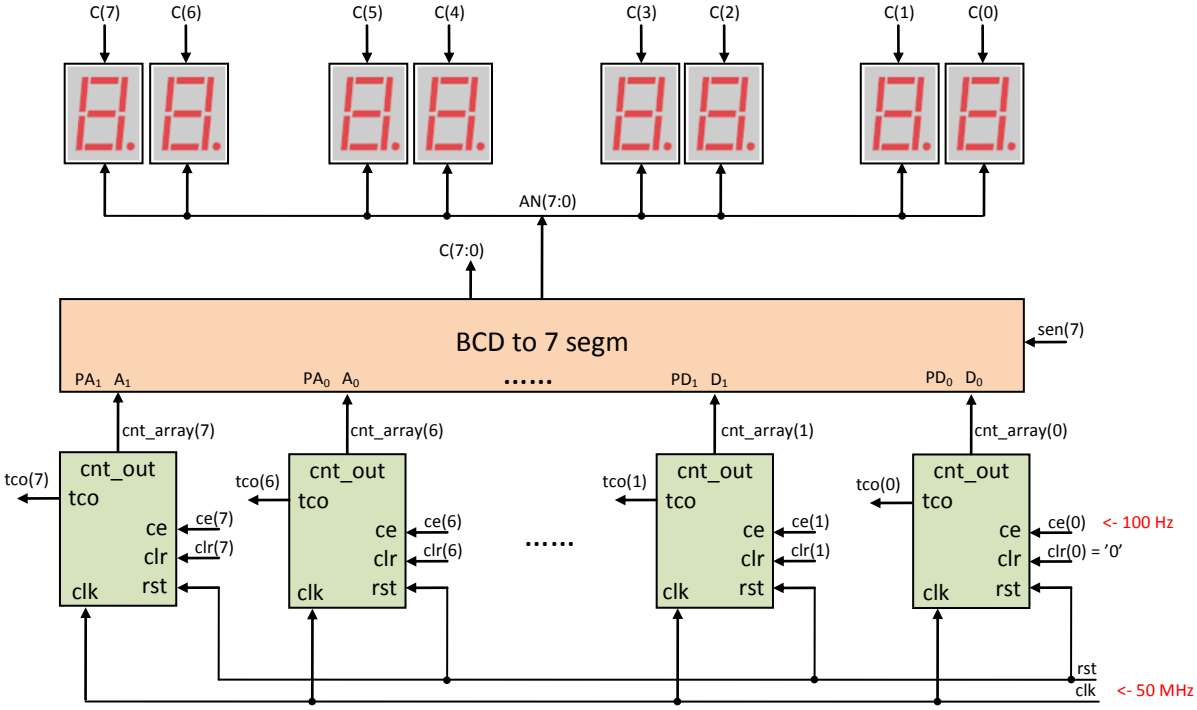
C(7)
C(6)
C(5)
C(4)
C(3)
C(2)
C(1)
C(0)
AN(7:0)
C(7:0)
BCD to 7 segm
sen(7)
PA1 A1
PA0 A0
.....
PD1 D1
PD0 D0
cnt_array(7)
cnt_array(6)
cnt_array(1)
cnt_array(0)
tco(7)
tco(6)
tco(1)
tco(0)
cnt_out
tco
ce
clr
rst
clk
ce(7)
clr(7)
ce(6)
clr(6)
ce(1)
clr(1)
ce(0)
<- 100 Hz
clr(0) = '0'
rst
clk
<- 50 MHz